KESSEBÖHMER

E-Verso

http://support.kesseboehmer.de/everso

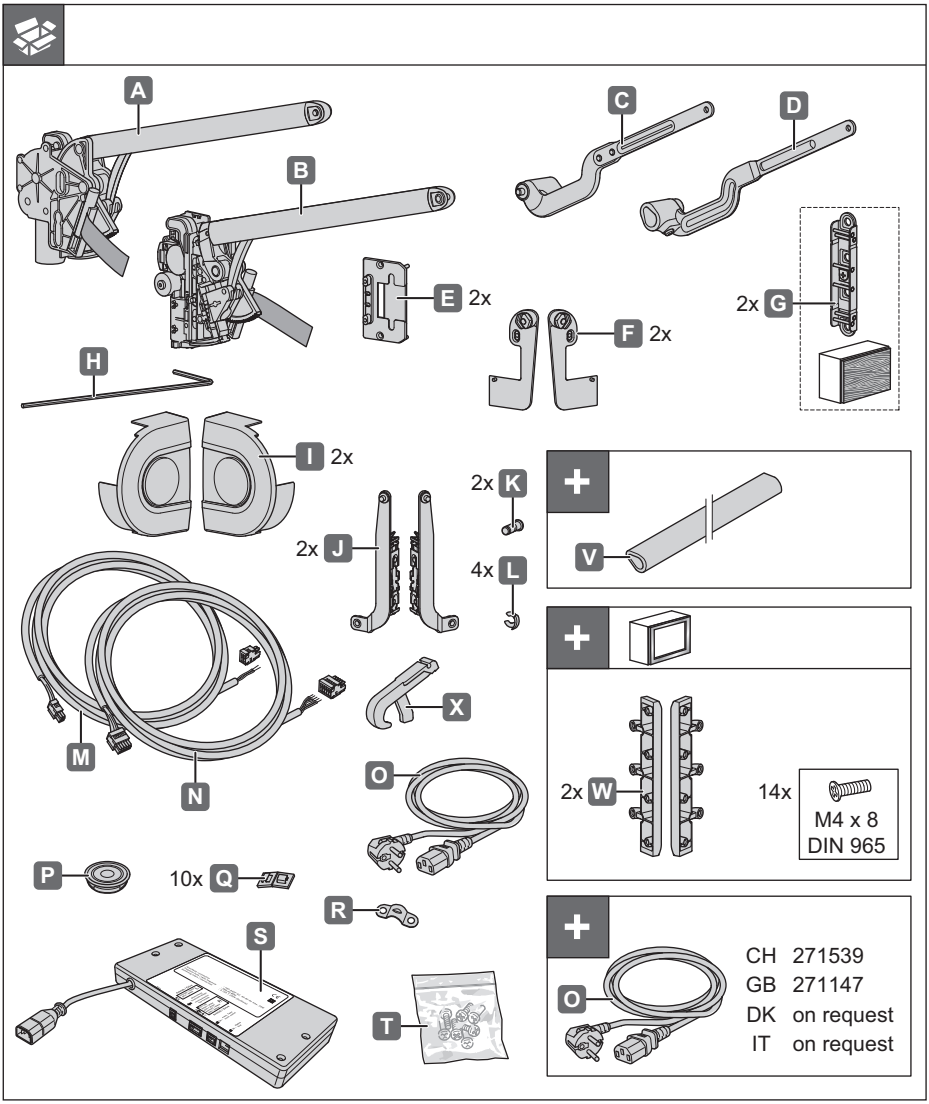

4025500000
12.0001.010.349
HDE 16.08.2012

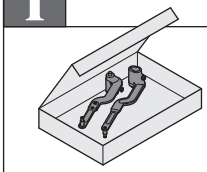

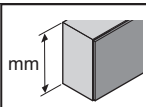

		EU (CE)	USA (UL)	AUS (UL)
420	2,0 - 5,0 kg	271586	on request	on request
	4,0 - 9,0 kg	271587	on request	on request
	6,0 - 12,0 kg	271588	on request	on request
	10,0 - 18,0 kg	271589	on request	on request
500	2,0 - 4,5 kg	271586	on request	on request
	4,0 - 8,0 kg	271587	on request	on request
	6,0 - 14,0 kg	271588	on request	on request
	8,0 - 16,0 kg	271589	on request	on request
600	2,0 - 4,5 kg	271586	on request	on request
	4,0 - 8,0 kg	271587	on request	on request
	6,0 - 11,0 kg	271588	on request	on request
	8,0 - 15,0 kg	271589	on request	on request
700	3,5 - 6,5 kg	271587	on request	on request
	6,0 - 10,0 kg	271588	on request	on request
	8,5 - 14,0 kg	271589	on request	on request
800	3,0 - 5,5 kg	271587	on request	on request
	5,0 - 9,5 kg	271588	on request	on request
	8,0 - 12,0 kg	271589	on request	on request

4025500000

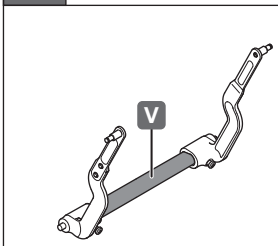

mm	mm	mm	
600	16	477	271110
	19		
900	16	777	271115
	19		
1200	16	1077	271121
	19		
1500	16	1377	271127
	19		
1800	16	1677	271128
	19		

12.0001.010.349

HDE 16.08.2012

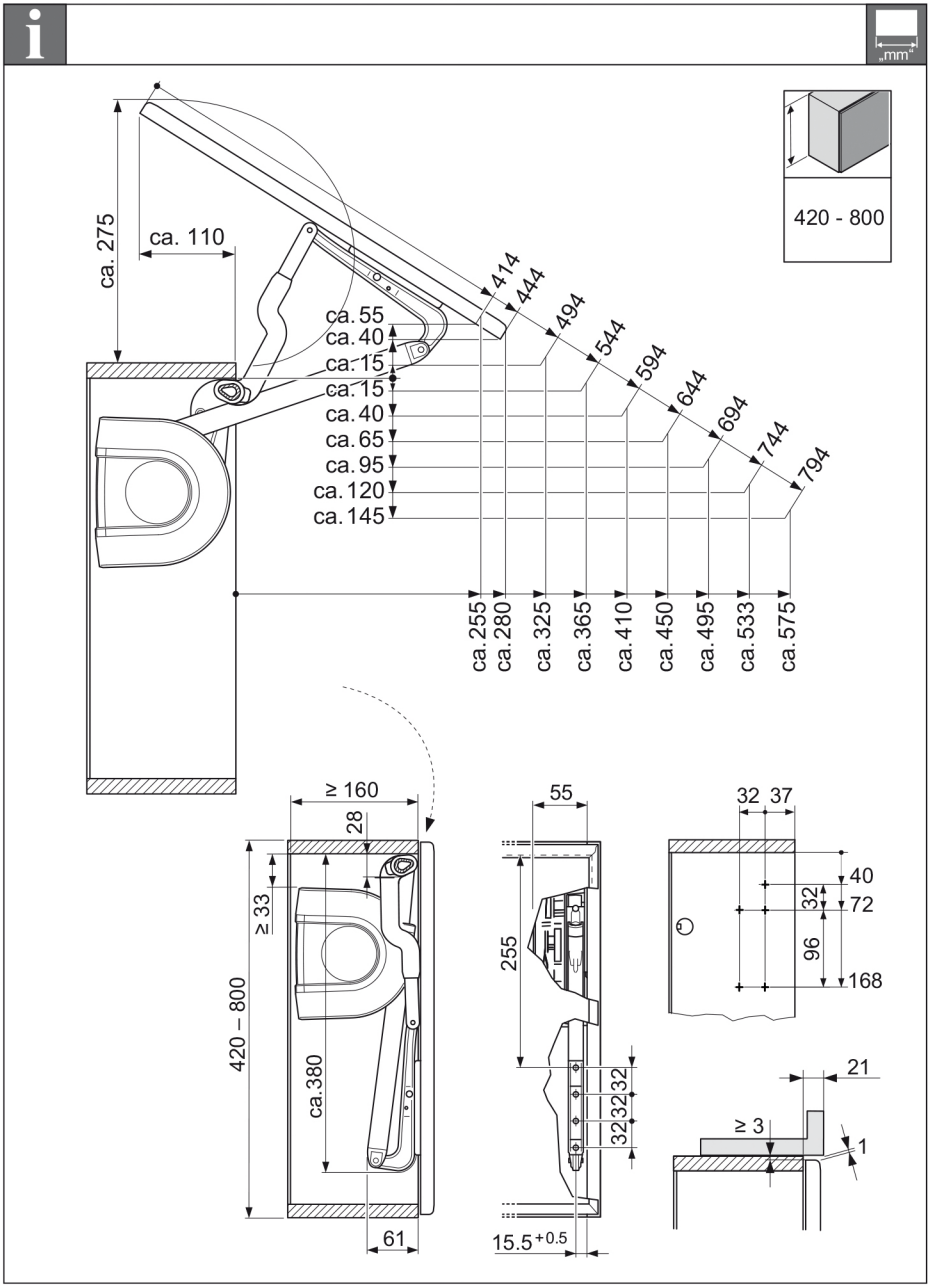
mm
420 - 800
ca. 275
ca. 110
ca. 55
ca. 40
ca. 15
ca. 15
ca. 40
ca. 65
ca. 95
ca. 120
ca. 145
414
444
494
544
594
644
694
744
794
ca. 255
ca. 280
ca. 325
ca. 365
ca. 410
ca. 450
ca. 495
ca. 533
ca. 575
≥ 160
28
≥ 33
420 – 800
ca. 380
61
55
255
32
32
32
15.5+0.5
32 37
40
32
72
96
168
21
≥ 3
1

1

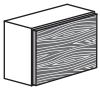

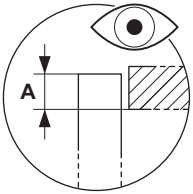

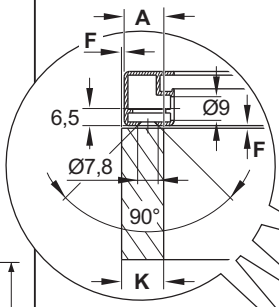

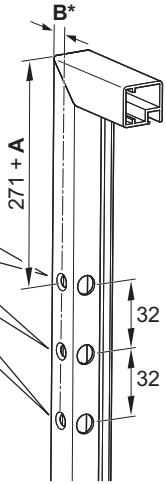

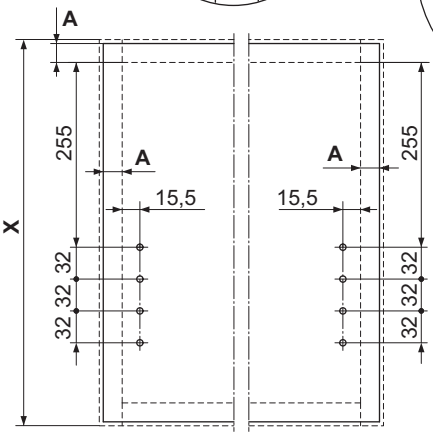

* **B** = **K** – **F** – 5,5

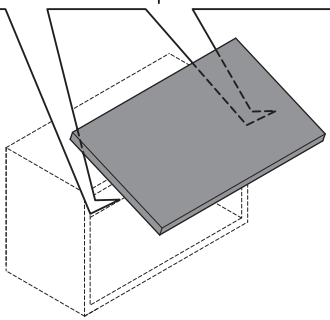

4025500000

12.0001.010.349

HDE 16.08.2012

2

PZ 1 / 2

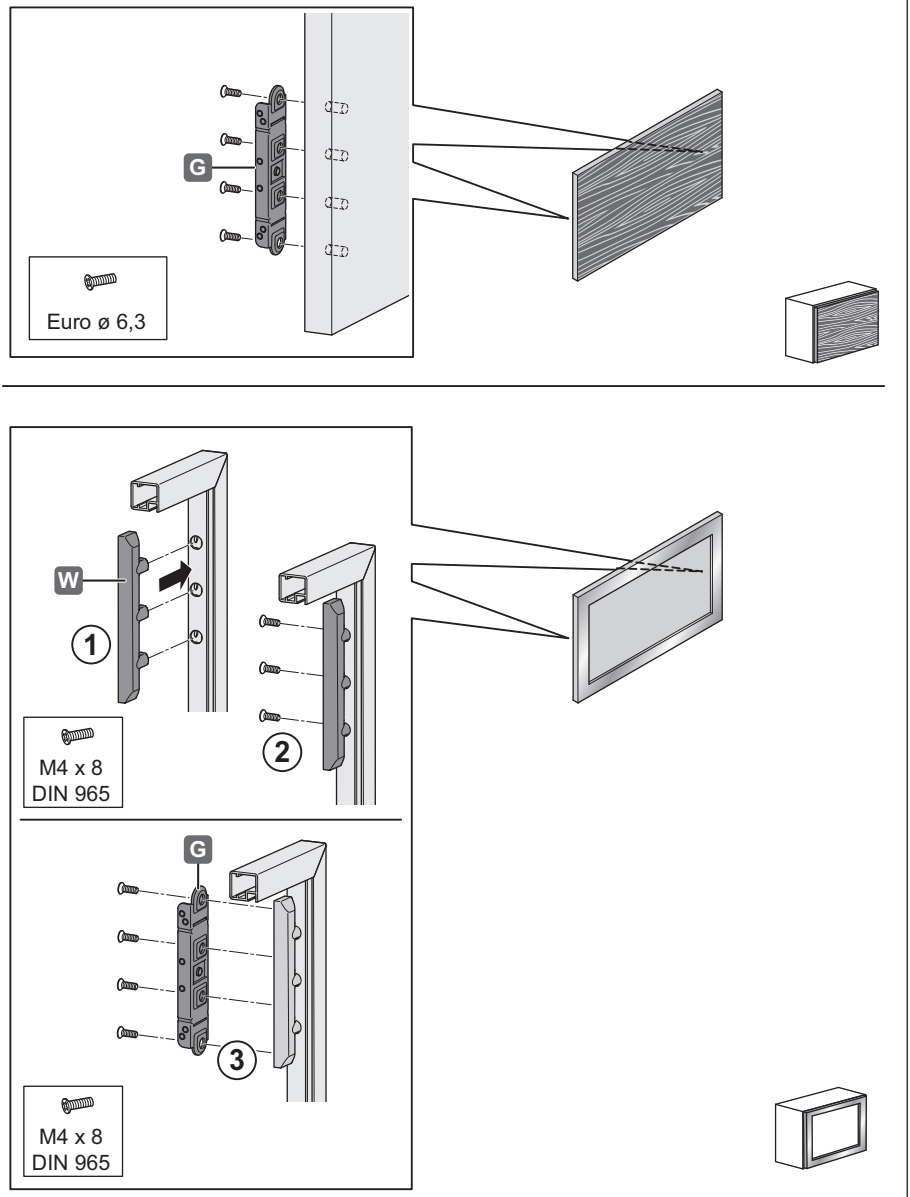

3

„mm"

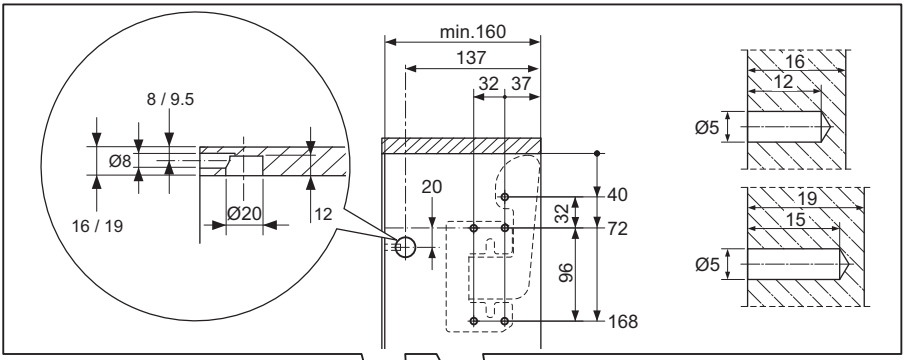

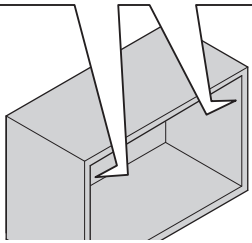

4

PZ 1 / 2

„mm"

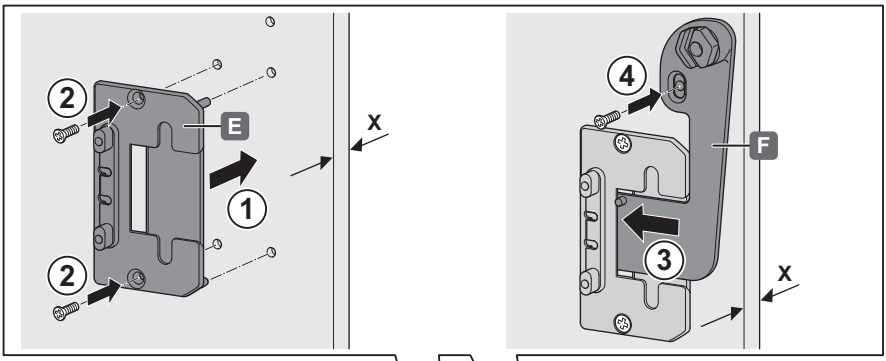

X	
16	Euro ø 6 x12
19	Euro ø 6 x16

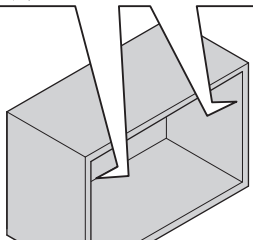

4025500000

12.0001.010.349

HDE 16.08.2012

5

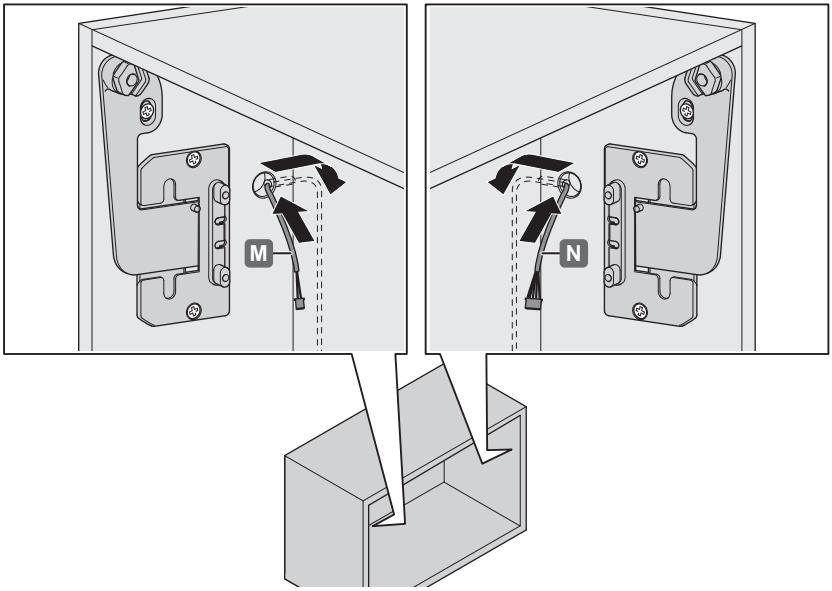

6

PZ 1 / 2

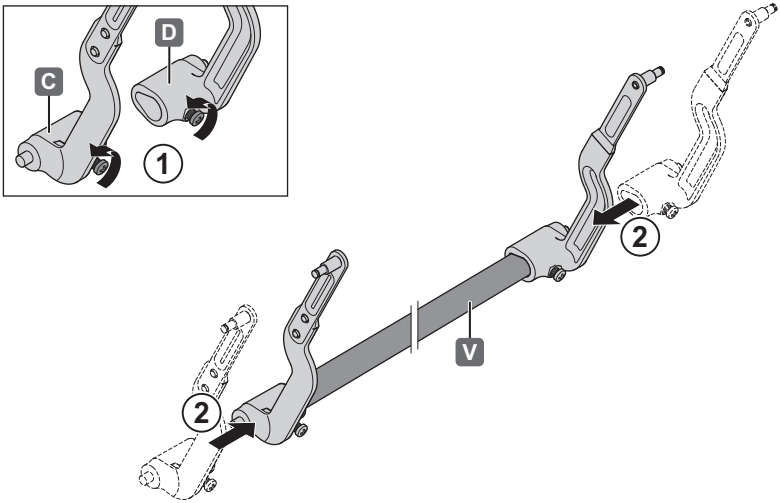

7

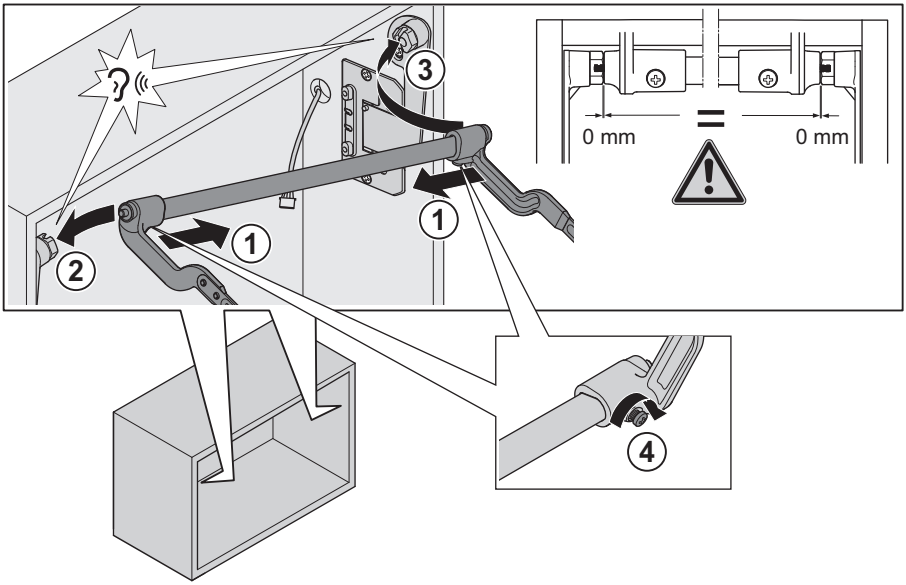

8

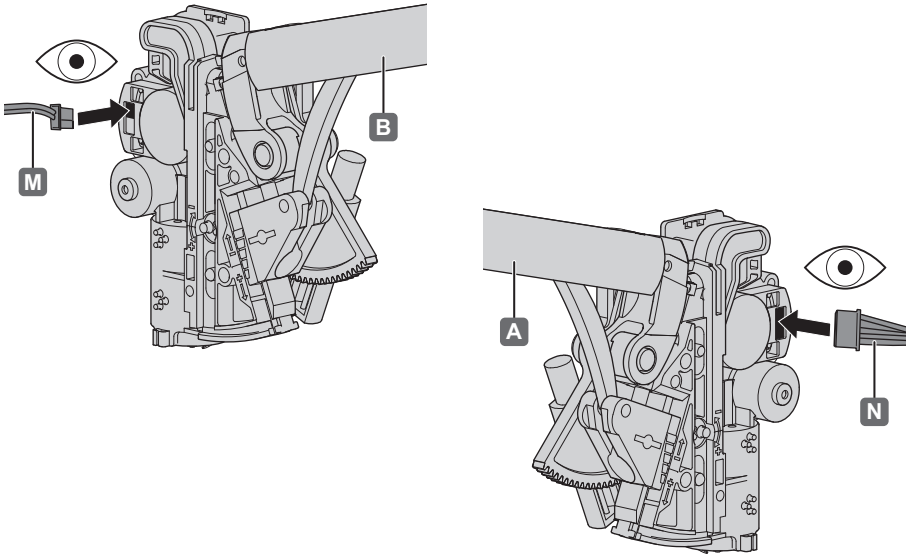

4025500000
12.0001.010.349
HDE 16.08.2012

9

PZ 1 / 2

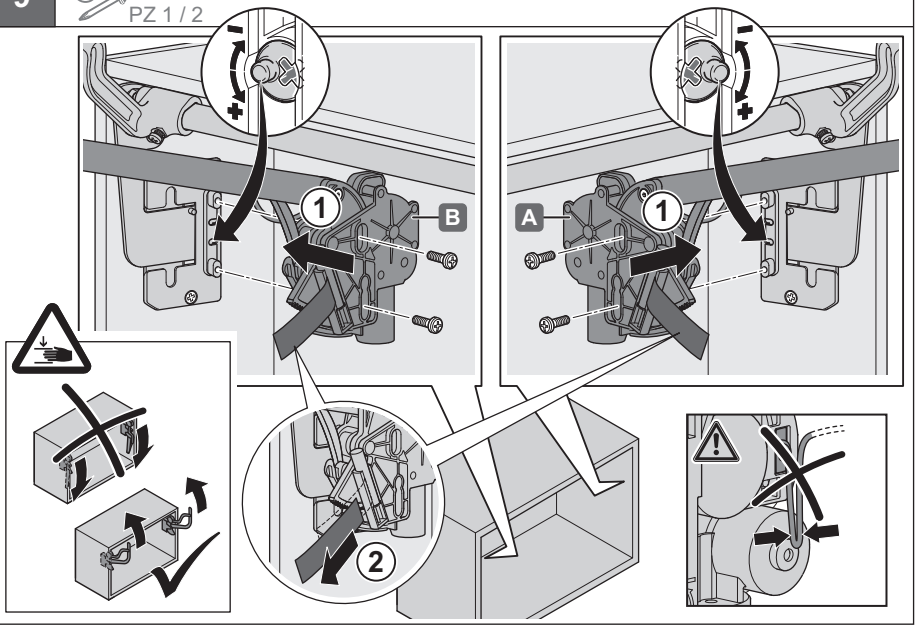

10

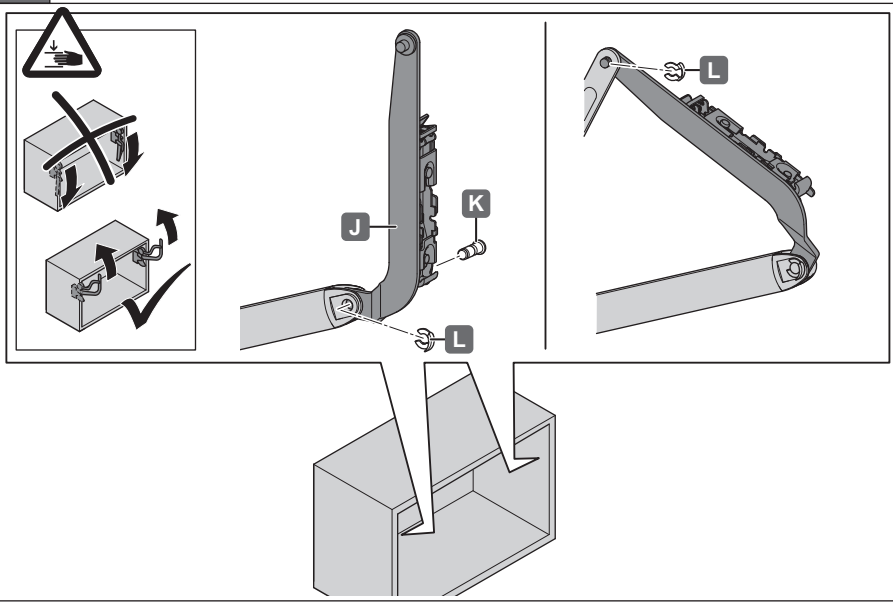

11

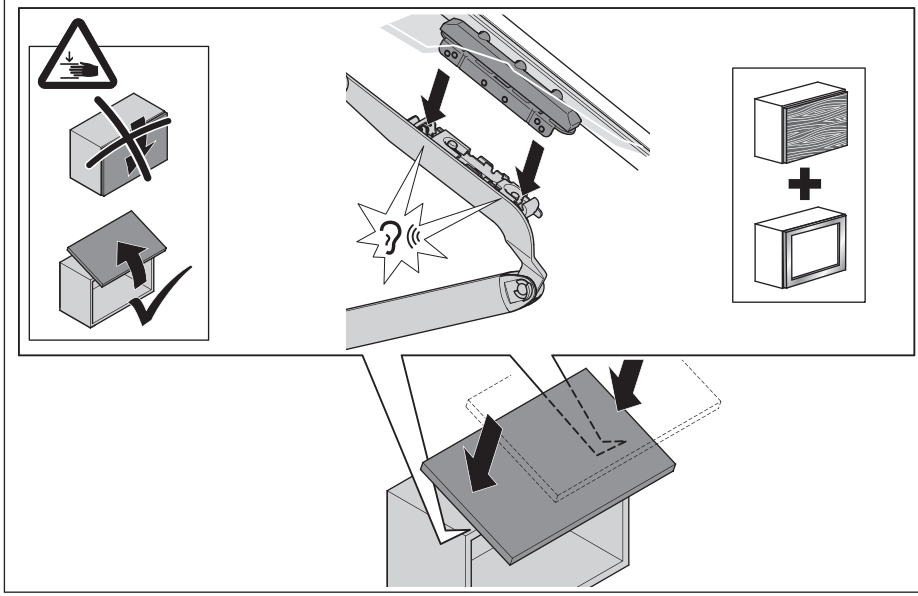

12

4

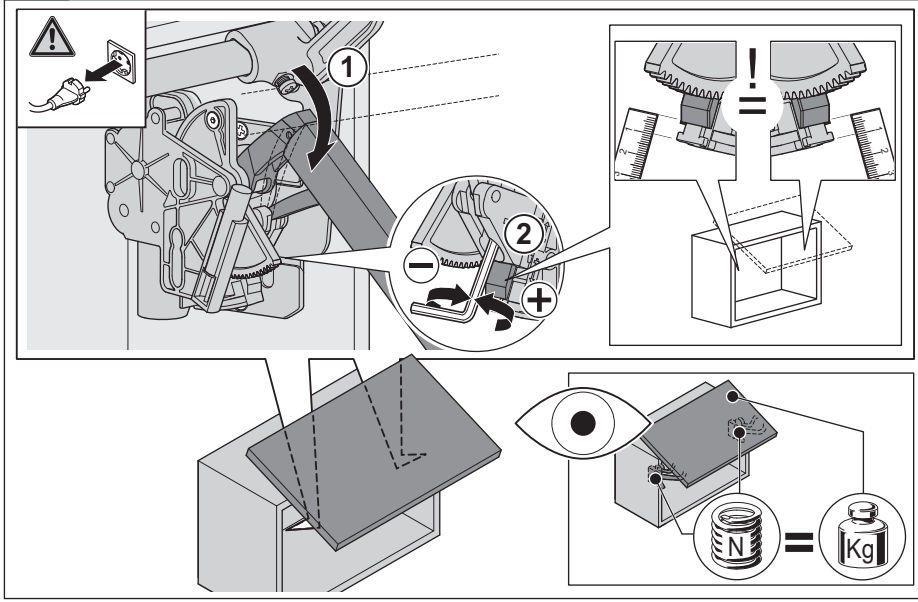

13

PZ 1 / 2

mm

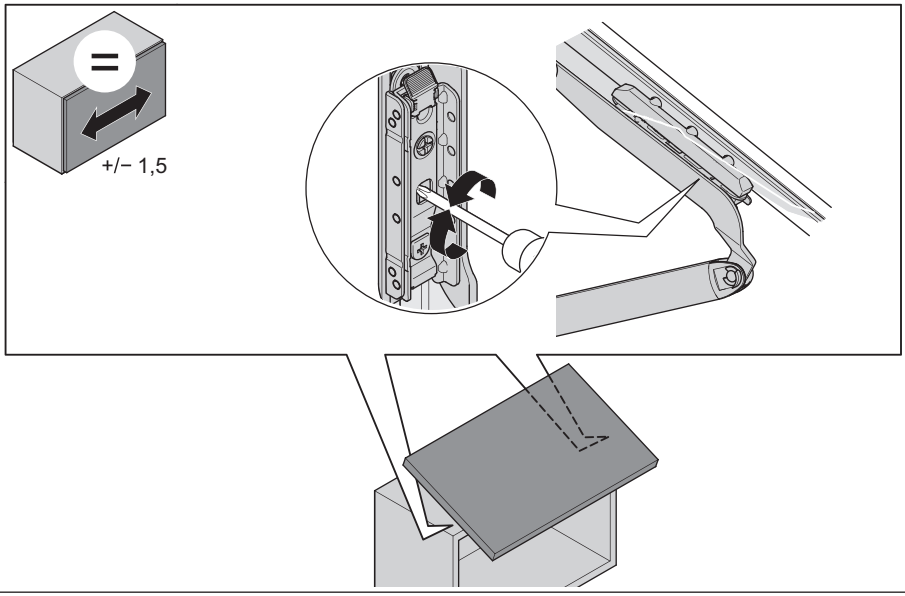

14

PZ 1 / 2

mm

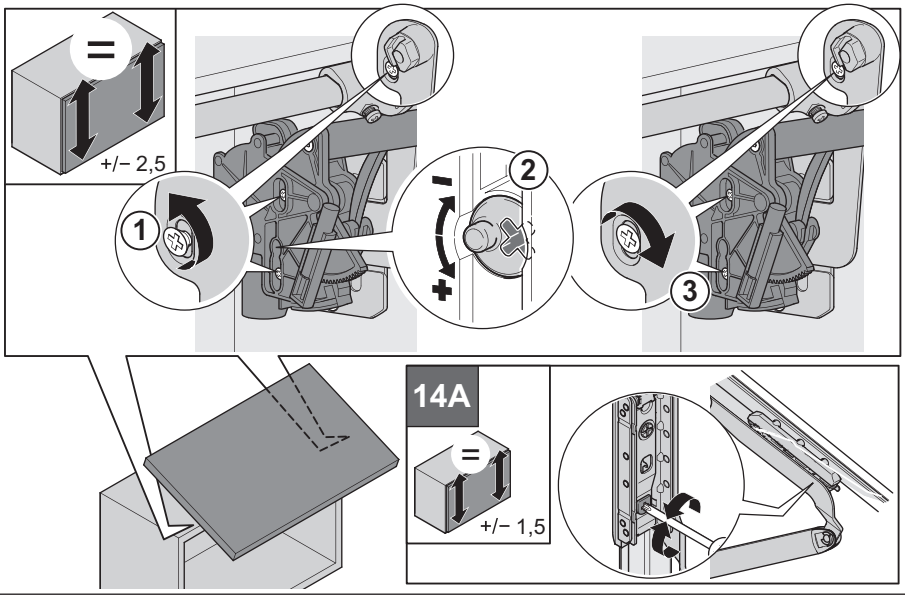

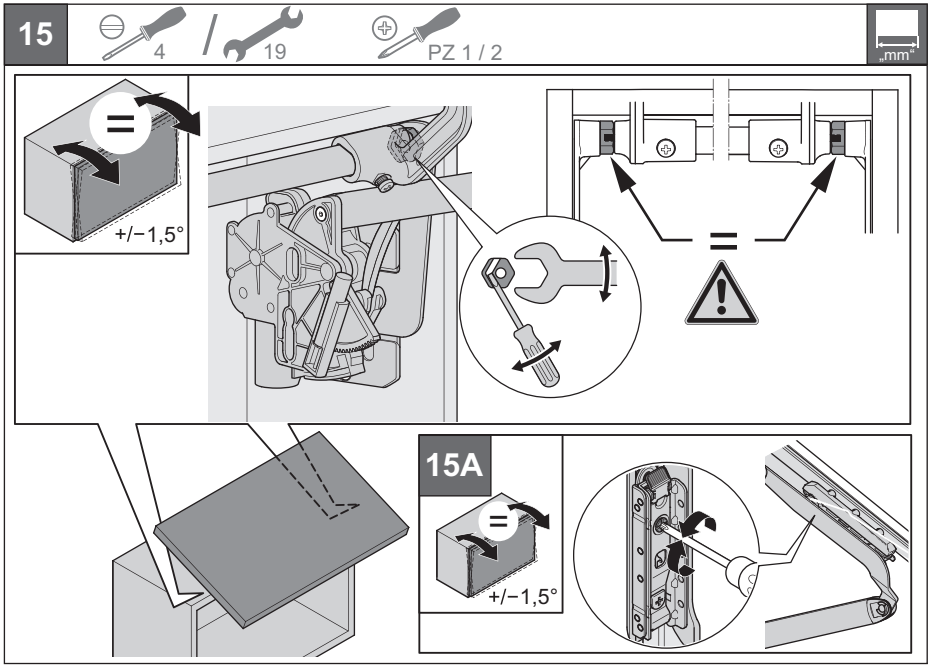

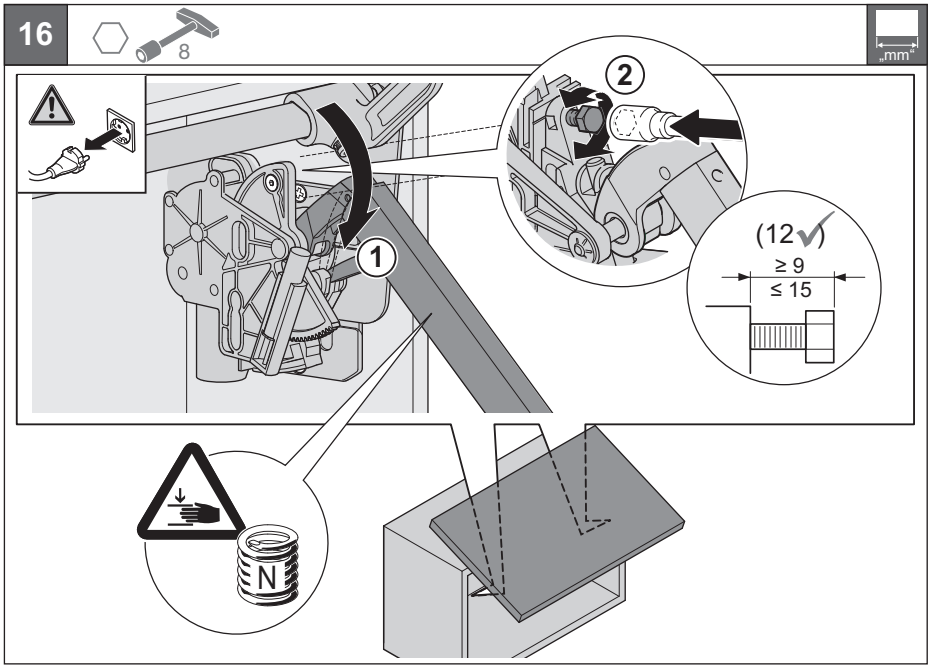

4025500000

12.0001.010.349

HDE 16.08.2012

17

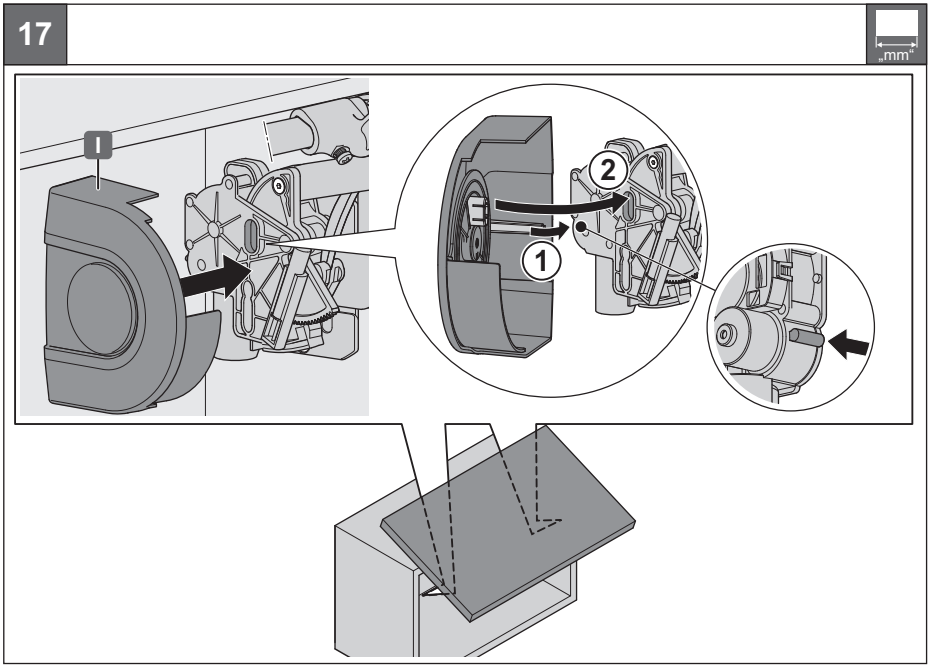

18

PZ 1 / 2

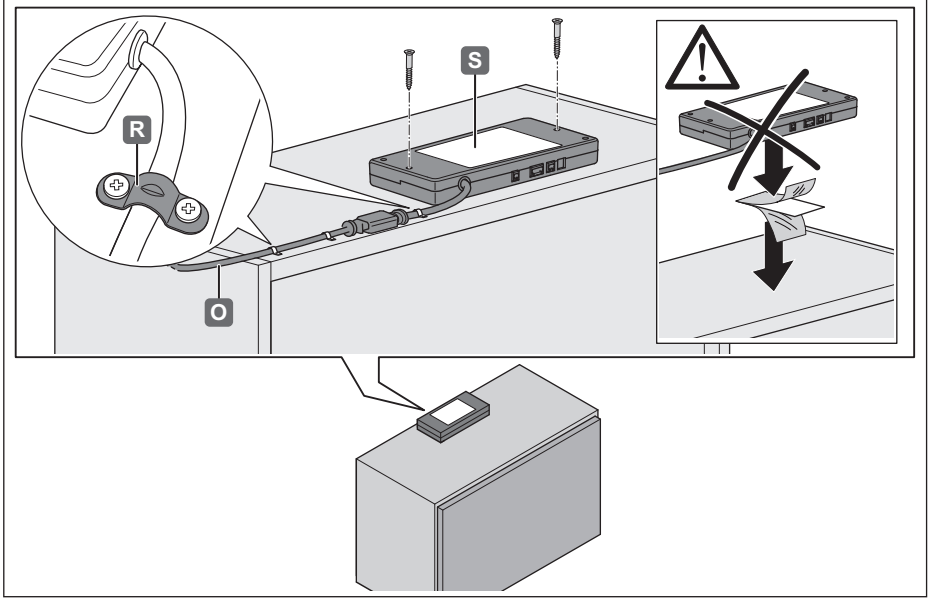

19

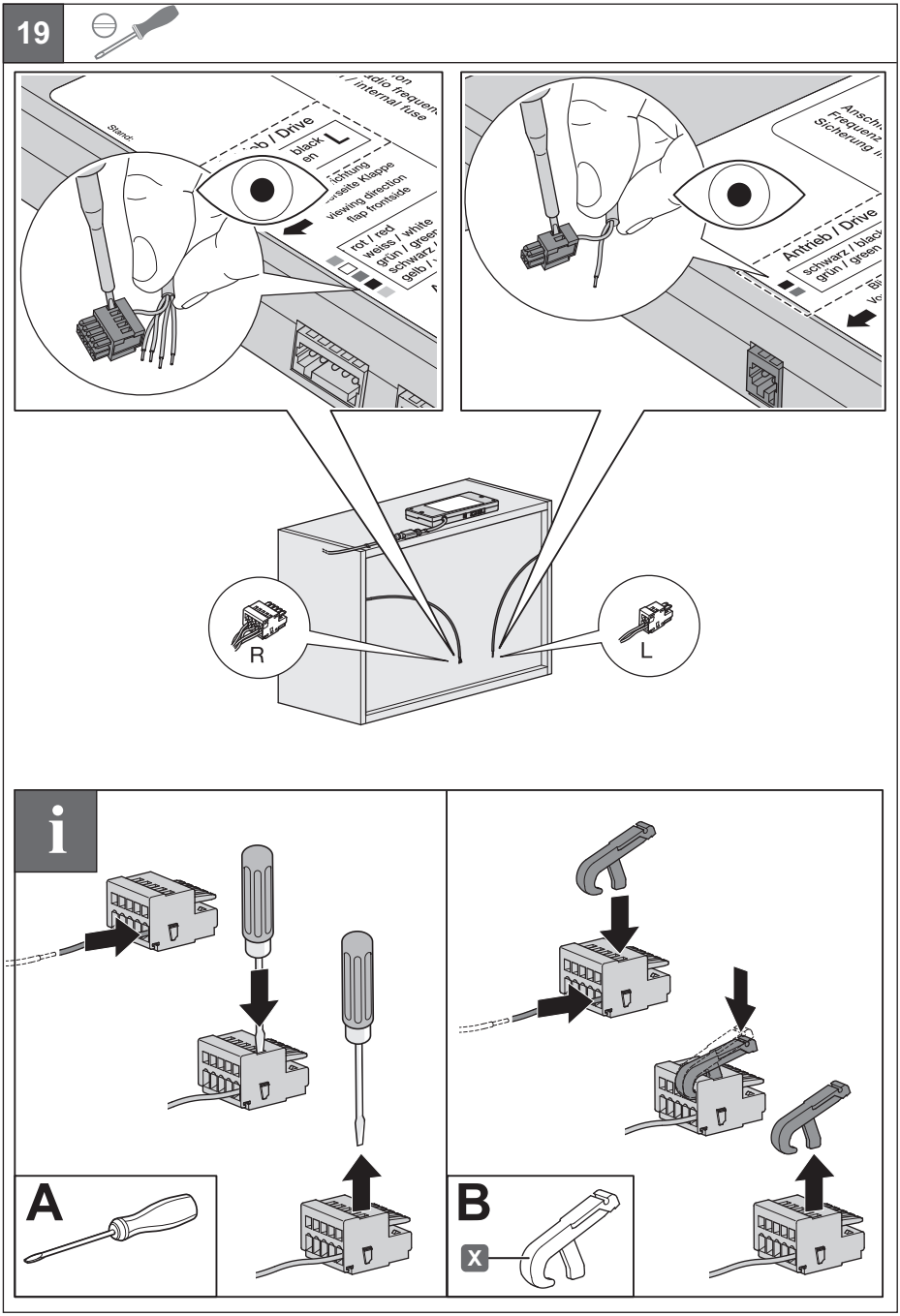

20

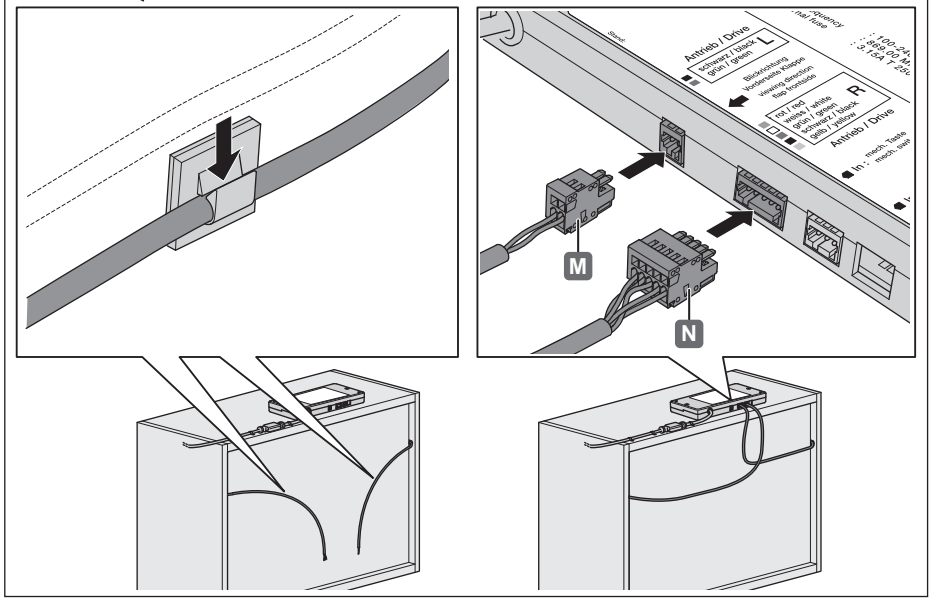

i

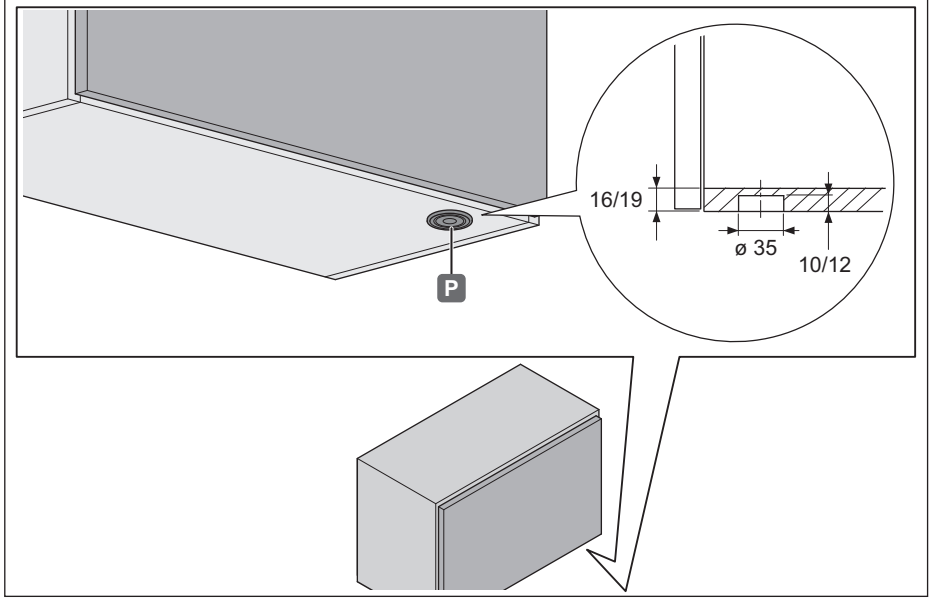

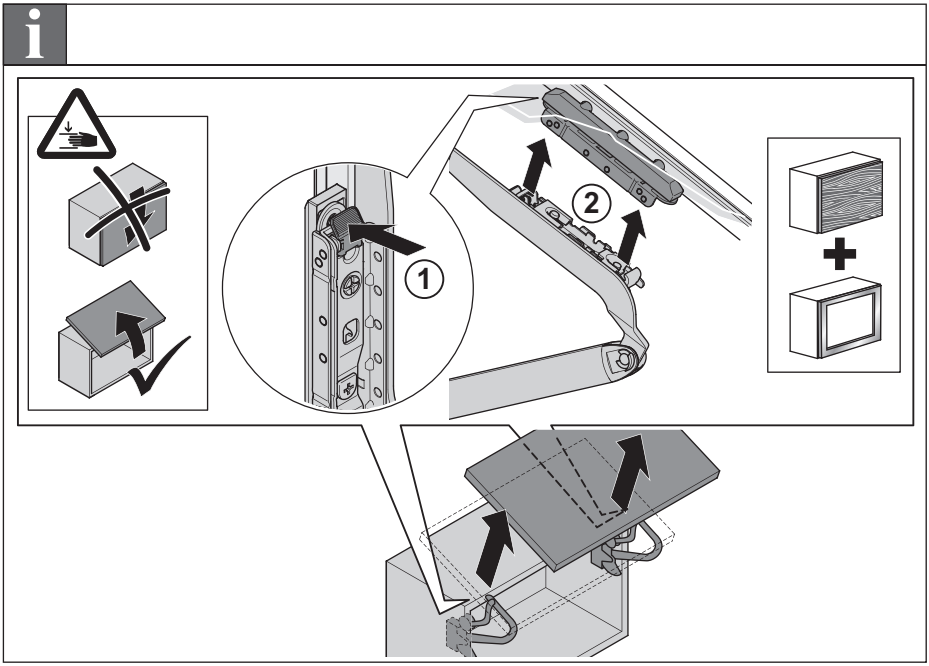

4025500000

12.0001.010.349

HDE 16.08.2012

Subject to changes

Kesseböhmer GmbH
Mindener Str. 208 · D-49152 Bad Essen · www.kesseboehmer.de